Grape Solar
GS-PWM-20A
Charge Controller

User Manual

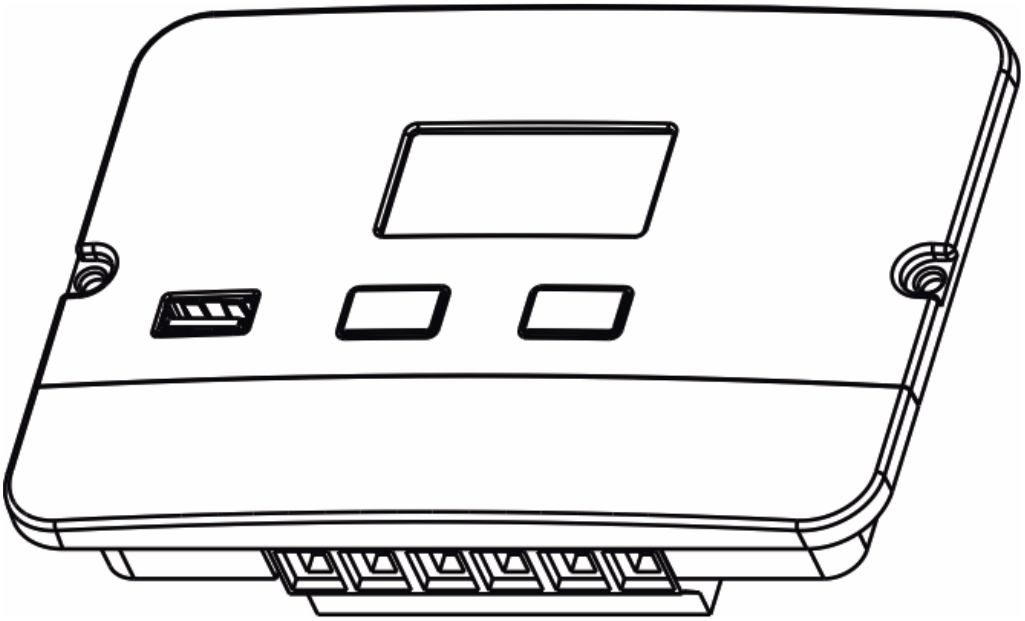

*Grape Solar reserves the rights to modify these specifications without notice.

1. Warnings and Tools Icon Chart

Icons	Name	Description
	**High Voltage**	High voltage device. Installation should be performed by an electrician.
	**High Temperature**	This device will produce heat. Mount device away from other items.
	**Environmental Hazard**	Electronic Equipment. Do not put in Landfill
	**Wire Cutter**	A wire cutter is needed for cutting and stripping wires prior to connection.
	**Multimeter**	A multimeter is needed for testing equipment and verifying polarity of cables.
	**Anti-static Glove**	Anti-static gloves are recommended to prevent controller damage caused by static electricity.
	**Electrical Tape**	Electrical tape is recommended to safely insulate spliced or bare wires.
	**Screwdriver**	A common size screwdriver is needed when attaching wires to the controller.

2. Product Features

Thank you for choosing Grape Solar. This PWM solar charge controller is a device for solar charge regulation and direct current output Load control. This device is mainly used in small sized off-grid solar power systems.

The Grape Solar PWM-20A charge controllers have these features：

- Charging modes available for most common deep -cycle battery types in the market, including AGM (sealed lead acid batteries), GEL, Flooded, and Lithium mode with customizable parameters.
- Automatic recognition of 12V/^4V battery system.

  *Lithium-ion batteries excluded from this feature.
- 5V1A USB outlet provides charging for mobile devices.
- Provides multiple load control mode options for light based, time based and manually adjusted scenarios.
- Industrial grade design with reverse polarity protection for solar panels, battery and Load.

3. Device Diagram

#	Description
1	LCD Display Screen
2	5V1A USB Port
3	Arrow Key
4	Load Key
5	Solar Terminals
6	Battery Terminals
7	Load Terminals
8	Installation Mounting Holes
9	Flat Mount Bracket

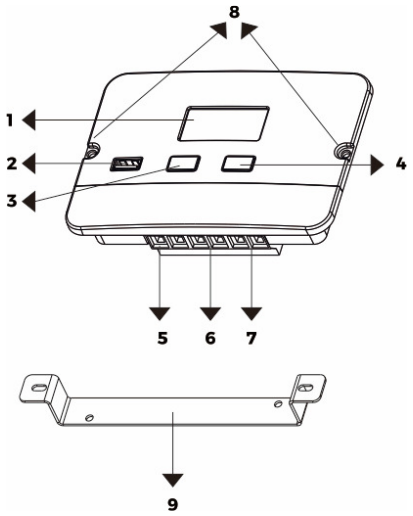

4. Mounting Instruction

This controller can be mounted flush or flat with included bracket at a cool dry and weather safe location.

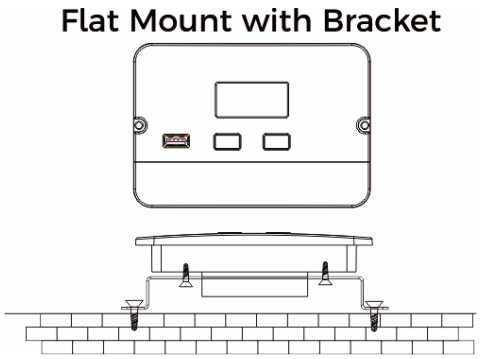

1. Attach the mounting bracket to the back of the controller using screws.
2. Mark the brackets mounting holes on the mounting surface.
3. Attach the mounting bracket to the mounting surface using screws.

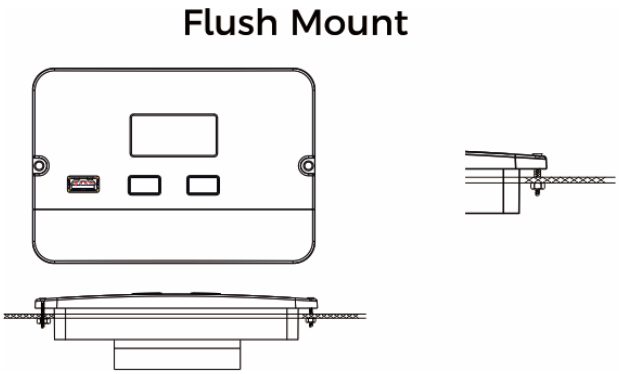

1. Mark the controller's dimension and mounting holes on the mounting surface.
2. Make necessary alterations to ensure the controller fits into the mounting surface snugly.

   Pre-install wires if needed (turn to next page for instructions).
3. Attach the controller to the mounting surface using screws.

5.Wire Connection Sequences

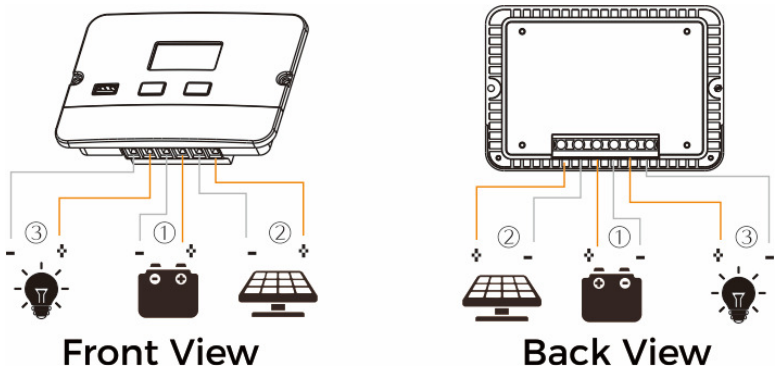

During installation of your PWM controller, please follow below order of connection：

1. Connect the positive battery wire followed by the negative battery wire.

2. Make sure your solar panels are fully covered to prevent electrical shock. Connect the positive solar array output wire followed by the negative solar array output wire.

3. Connect the DC Load wiring to the DC Load output (if applicable).

6. LCD Display Interface Overview

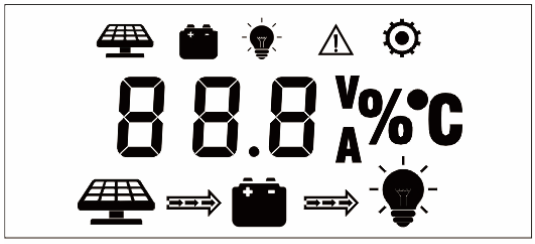

Display Section	Display Layout
Charge Status	
Charge Mode & Parameter	88.8 V A % °C
Active Functions	

7. Status Inform

Status Icon	Indication	Status	Description
	Solar	Steady On	Daylight Detected
		Off	No Daylight Detected
		Flowing	Solar Charging Battery
		Flash	Solar Input System Over Voltage
	Battery	Steady On	Battery Connected and Functional
		Off	No Battery Connection
		Slow Flash	Battery Over-Discharged
		Slow Flash	Battery Over-Voltage
	DC Load	Flowing	DC Load On
		Off	DC Load Off
		Flash	Over-Load /Short-Circuit

8. Key Functionality Chart

Function Key	System Mode	Input	Input Function
▲ ▼	View Mode	Long Press	Enter SET mode
		Short Press	View Next Page
	View Mode	Long Press	N/A
		Short Press	Switch Load On/Off (Manual Control Program Only)
▲ ▼	Set Mode	Long Press	Save Data & Exit SET Mode
		Short Press	View Next Page
	Set Mode	Long Press	N/A
		Short Press	Adjust parameter

9. LCD Display Rules & Cycles

Pre start-up display cycle when the MPPT controller turns on, this usually last several seconds while controller detects operating environment.

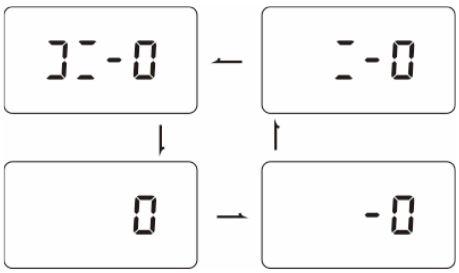

LCD Screen Display Cycle

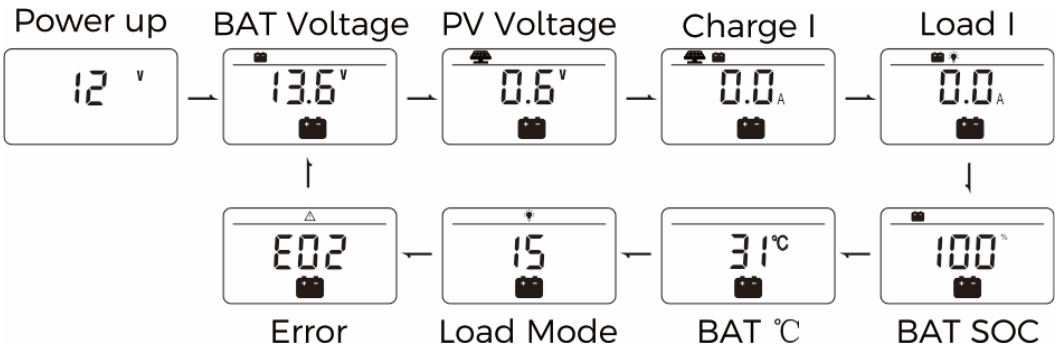

• The battery voltage view will be displayed by default. Use the up and down arrow keys to cycle through different views.
• The battery voltage view will resume upon 12 seconds of inactivity.
• The Error Code view will be displayed automatically if there is any controller error occurs.

Setting Battery Mode

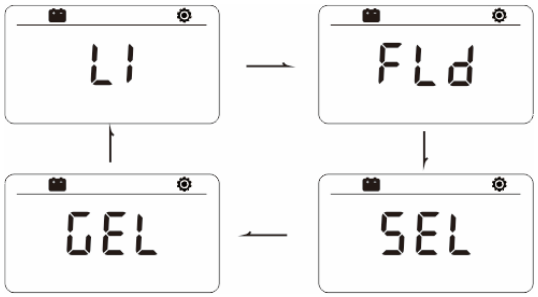

Abbreviations	Battery Types	Description
FLD	Flooded Battery	Auto-recognition with default parameters set for each type of Batteries.
SEL	Sealed/AGM Battery	
GEL	Gel Battery	
LI	Lithium Battery	Customize charge & discharge voltages.

Advance Battery Settings

- In Lithium mode, short press the arrow key again to cycle through each parameter view.
- Use the load key to adjust parameter value, then Long press arrow key to save and exit.

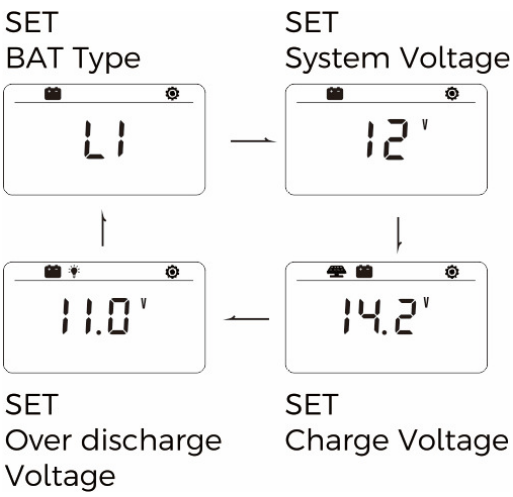

Load Mode Settings

- Enter Load SET Mode by pressing the arrow key in Load Mode view only.
- Short press the arrow key to cycle through load modes before Long pressing the arrow key again to save and exit.

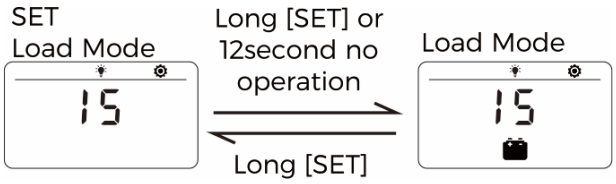

Mode	Definition	Description
0	Daylight Auto-Control	DC load turns on when NO daylight is detected.
1~14	Daylight On/Timer Off	DC load turns on when NO daylight is detected. DC load turns off according to timer setting ("1" means DC Load will be turned off in an hour…, "14" means DC Load will be turned off in 14 hours.
15	Manual Mode	DC load turns on/off by pressing the Return key.
16	Testing Mode	DC load turns on and off in a quick succession.
17	Always On	DC load stays on.

10. Error Code

Code	Error	Description & Quick Troubleshooting
E00	No error	No action needed.
E01	Battery Over--discharged	Battery voltage is too low. DC Load will be turned off until battery re-charges to recovery voltage
E02	Battery Over-voltage	Battery voltage has exceeded controller Limit. Check battery bank voltage for compatibility with controller.
E04	Load Short Circuit	DC Load short circuit.
E05	Load Overload	DC Load power draw exceeds controller capability. Reduce load size or upgrade to a higher load capacity controller.
E06	Overheating	Controller exceeds operating temperature limit. Ensure the controller is placed in a well-ventilated cool, dry place.
E08	Solar Over --amperage	Solar array amperage exceeds controller rated input amperage. Decrease the amperage of solar panels connected to the controller or upgrade to a higher rated controller.

E10	Solar Over-voltage	Solar array voltage exceeds controller rated input voltage. Decrease the voltage of solar panels connected to the controller.
E13	Solar Reverse Polarity	Solar array input wires connected with reverse polarity. Disconnect and re-connect with correct wire polarity.
E14	Battery Reverse Polarity	Battery connection wires connected with reverse polarity. Disconnect and re-connect with correct wire polarity.

*Contact Grape Solar for Live technical support on additional troubleshooting.

11. Controller Specification

The variable “n" is adopted as a multiplying factor when calculating parameter voltages, the rule for “n" is listed as: if battery system voltage is 12V, n=l; 24V, n=2.

For example, the equalize charge voltage for a 12V FLD (Flooded) battery bank is 14.8V*1=14.8V.

The equalizing charge voltage for a 24V FLD (Flooded) battery bank is 14.8V*2=29.6V.

Parameter	Value
Model No.	GS-PWM-20A
Battery System Voltage	12V/24V Auto (FLDA3EL/5LD) Manual (Li)
No-Load Loss	8ma (12V), 12ma (24V)
Max Solar Input Voltage	<55V
Rated Solar Charge Current	20A
Max Solar Input Power	340W/12V 680W/24V
Light Control Voltage	5V*n
Light Control Delay Time	10s

Max Load Output Current	20A
Operating Temperature	-35°C - +45°C / -31°F - +113°F
IP Protection	IP32
Net Weight	0.25 kg/0.55 lbs.
Operating Altitude	< 3000 meters/< 9842 feet
Controller Dimension	130*90*34.6 mm / 5.11*3.54*1.36 inch
Parameter	**Battery Parameters**

Battery Types	FLD	SEL	GEL	LI
Equalize Charge Voltage	14.8V*n	14.6V*n	—	—
Boost Charge Voltage	14.6V*n	14.4V*n	14.2V*n	14.4V*n (adjustable)
Float Charge Voltage	13.8V*n			—
Boost Charge Recovery Voltage	13.2V*n			—
Over-discharge Recovery Voltage	12.6V*n			12.6V*n (adjustable)
Over-discharge Voltage	11.1V*n			11.1V*n (adjustable)

12. Product Dimensions

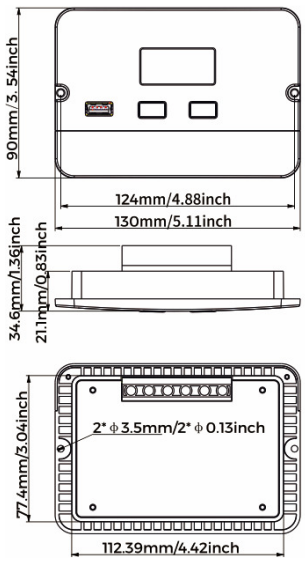

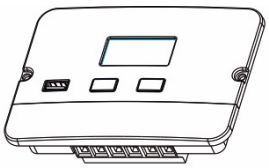

Product Dimension:
130*90*34.6 mm / 5.11*3.54*1.36 inch
Flat Mount Size: 124 mm / 4.88 inch
Flush Mount Size: 130 mm / 5.11 inch
Installation Hole Size:
ϕ3.5 mm / **ϕ**0.13 inch